VI - VI/T

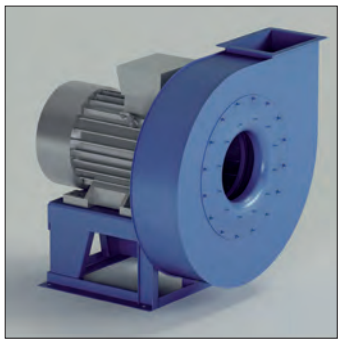

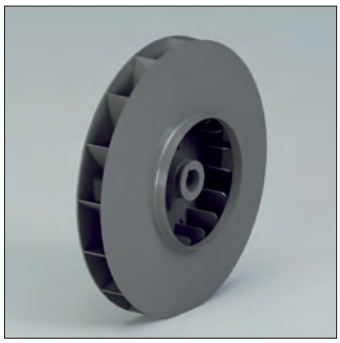

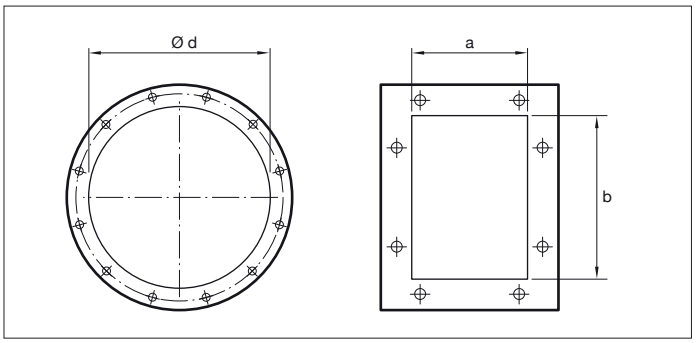

VI - VI/T
Direct and indirect driven centrifugal fans.
Impeller with negative (backwards curved) blades.

Application
For the transport of clean air.

Application area
Low-medium air volume, high pressures.

Technical specifications:
Air volume: 850 up to 180.000 m³/h
Total pressure: 100 up to 1.800 daPa.

Model	Installed power (kW)	Axle height mm	Poles	Inlet ø d mm	Outlet dimensions a x b mm	Inspection door	Welding fan housing
VI400/N2	2.2	90	2	225	148 x 207	Optional	Optional
VI450/N2	3	100	2	250	166 x 231	Optional	Optional
VI450/N2	4	112	2	250	166 x 231	Optional	Optional
VI500/N2R	4	112	2	275	185 x 258	Optional	Optional
VI500/N2R	5.5	132	2	275	185 x 258	Optional	Optional
VI500/N2	5.5	132	2	275	185 x 258	Optional	Optional
VI500/N2	7.5	132	2	275	185 x 258	Optional	Optional
VI560/N2R	7.5	132	2	325	205 x 288	Optional	Optional
VI560/N2	11	160	2	325	205 x 288	Optional	Optional
VI630/N2R	15	160	2	350	229 x 322	Optional	Optional
VI630/N2R	18.5	160	2	350	229 x 322	Optional	Optional
VI630/N2	18.5	160	2	350	229 x 322	Optional	Optional
VI630/N2	22	180	2	350	229 x 322	Optional	Optional
VI710/N2R	22	180	2	400	256 x 361	Optional	Included
VI710/N2R	30	200	2	400	256 x 361	Optional	Included
VI710/N2	30	200	2	400	256 x 361	Optional	Included
VI710/N2	37	200	2	400	256 x 361	Optional	Included
VI800/N2R	45	225	2	450	288 x 404	Optional	Included
VI800/N2R	55	250	2	450	288 x 404	Optional	Included
VI800/N2	55	250	2	450	288 x 404	Optional	Included
VI800/N2	75	280	2	450	288 x 404	Optional	Included
VI900/N2R	90	280	2	500	322 x 453	Optional	Included
VI900/N2	110	315	2	500	322 x 453	Optional	Included
VI1000/N2R	160	315	2	550	361 x 507	Optional	Included
VI1000/N2	200	315	2	550	361 x 507	Optional	Included

FA.T07.FM.2014.V2.0.UK

VI - VI/T

DELIVERY CHARACTERISTICS

•Load tolerance ±5%

• Fan	• Motor	P inst. [kW]	n	LpA [dB(A)]	Q [m³/h]													
					935	1080	1225	1370	1440	1620	1800	2160	2520	2880	3240	3600	3960	4320
					pt[mmH$_2$O]													
VI400/N2	90	2,2	2920	62	272	270	267	262	258	252	244	224	196	166				
VI450/N2	112	4	2940	66					348	343	339	332	316	301	275	250	216	
VI500/N2R	112	4	2940	67							374	370	358	340	326	311	282	
VI500/N2R	132	5,5	2950	67							376	372	360	342	328	313	284	254
VI500/N2	132	5,5	2950	70								430	421	413	401	392	372	352
VI500/N2	132	7,5	2960	70									423	415	403	394	374	354
VI560/N2R	132	7,5	2960	71									485	480	475	462	454	438
VI560/N2	160	11	2960	72										545	540	533	527	518
VI630/N2R	160	15	2960	72												605	600	590
VI630/N2R	160	18,5	2960	73												605	600	590
VI630/N2	160	18,5	2960	74													700	690
VI630/N2	180	22	2960	75													700	690
VI710/N2R	180	22	2960	75														
VI710/N2R	200	30	2960	76														
VI710/N2	200	30	2960	77														
VI710/N2	200	37	2960	78														
VI800/N2R	225	45	2960	76														
VI800/N2R	250	55	2960	82														
VI800/N2	250	55	2960	82														
VI800/N2	280	75	2970	83														
VI900/N2R	280	90	2970	83														
VI900/N2	315	110	2980	84														
VI1000/N2R	315	160	2980	85														
VI1000/N2	315	200	2980	86														

VI - VI/T

•Noise tolerance ±4dB(A)

Q [m³/h]																		
4680	5400	6120	7200	7920	9000	10080	10800	12600	14400	16200	18000	19800	21600	25200	28800	30600	37000	42500
pt[mmH$_2$O]																		
230																		
335	277																	
424	385	340																
504	480	445	382	330														
580	565	540	495															
580	565	540	495	454	390													
683	668	652	626	594	552													
683	668	652	626	594	552	495	455											
780	775	765	744	724	684													
780	775	765	744	724	684	650	622	530										
	885	878	860	848	826	795	773											
	885	878	860	848	826	795	773	725										
			1120	1110	1096	1080	1060	1020										
			1120	1110	1096	1080	1060	1020	960	886	795	695	580					
				1205	1195	1182	1170	1145	1100									
								1155	1110	1060	980	900	790					
								1430	1415	1376	1325	1275						
								1530	1525	1508	1475	1440	1397	1265	1142	1020		
									1733	1737	1733	1718	1693	1606	1510	1425	1150	
										1890	1890	1885	1875	1815	1730	1682	1460	1244

The A-weighted sound power level, LpA (Chap.13), is the value measured in test conditions at the point of maximum noise level.

VI - VI/T

SUCTION CHARACTERISTICS

•Load tolerance ±5%

• Fan	Motor	P inst. [kW]	n	LpA [dB(A)]	Q [m³/h]													
					935	1080	1225	1370	1440	1620	1800	2160	2520	2880	3240	3600	3960	4320
					pt[mmH$_2$O]													
VI400/N2	90	2,2	2920	62	263	261	257	252	248	241	232	210	179	146				
VI450/N2	112	4	2940	66					334	329	324	316	299	282	255	227	191	
VI500/N2R	112	4	2940	67							358	354	341	323	308	291	262	
VI500/N2R	132	5,5	2950	67							360	355	343	324	309	293	263	232
VI500/N2	132	5,5	2950	70								409	400	391	378	368	347	325
VI500/N2	132	7,5	2960	70								411	401	393	380	369	349	327
VI560/N2R	132	7,5	2960	71									460	454	449	435	427	410
VI560/N2	160	11	2960	72										514	508	500	493	484
VI630/N2R	160	15	2960	72												567	562	552
VI630/N2R	160	18,5	2960	73												567	562	552
VI630/N2	160	18,5	2960	74													651	641
VI630/N2	180	22	2960	75													651	641
VI710/N2R	180	22	2960	75														
VI710/N2R	200	30	2960	76														
VI710/N2	200	30	2960	77														
VI710/N2	200	37	2960	77														
VI800/N2R	225	45	2960	76														
VI800/N2R	250	55	2960	80														
VI800/N2	250	55	2960	80														
VI800/N2	280	75	2970	81														
VI900/N2R	280	90	2970	81														
VI900/N2	315	110	2980	82														
VI1000/N2R	315	160	2980	83														
VI1000/N2	315	200	2980	84														

VI - VI/T

•Noise tolerance ±4dB(A)

Q [m³/h]																		
4680	5400	6120	7200	7920	9000	10080	10800	12600	14400	16200	18000	19800	21600	25200	28800	30600	37000	42500
pt[mmH$_2$O]																		
206																		
307	245																	
396	355	308																
469	443	407	340	284														
542	526	501	454															
542	526	501	454	413	346													
634	618	601	573	541	497													
634	618	601	573	541	497	437	394											
721	715	705	684	664	625													
721	715	705	684	664	625	590	562	469										
	810	802	784	772	749	718	696											
	810	802	784	772	749	718	696	645	545	445								
			1005	996	982	967	948	910										
			1005	996	982	967	948	910	854	784	697	599	483					
				1073	1063	1050	1039	1014	971									
				1081	1071	1058	1047	1022	980	932	857	780	673					
							1250	1247	1233	1199	1155	1111						
							1327	1324	1318	1302	1273	1242	1204	1088	973	862		
									1478	1479	1475	1462	1441	1370	1289	1219	978	
										1591	1589	1584	1574	1526	1457	1418	1231	1037

The A-weighted sound power level, LpA (Chap.13), is the value measured in test conditions at the point of maximum noise level.

FA.T07.FM.2014.V2.0.UK

VI - VI/T

•Size	• Max rpm		
	CLASSE I	CLASSE II	CLASSE III
VI400	5000		
VI450/R	5000		
VI450	5000		
VI500/R	4750		
VI500	4500	5000	
VI560/R	4250	4750	
VI560	4000	4500	
VI630/R	3850	4150	4500
VI630	3700	3900	4250
VI710/R	3550	3850	4150
VI710	3400	3700	4000
VI800/R	3250	3550	3850
VI800	3000	3300	3600
VI900/R	3200	3500	3700
VI900	3000	3250	3450
VI1000/R	3150	3350	3450
VI1000	3000	3150	3350
VI1120	2700	2900	3100
VI1250	2400	2600	2800
VI1400	2100	2300	2450
VI1600	1850	2000	2100
VI1800	1650	1750	1850
VI2000	1450	1550	1650

• Values valid up to 60°C

• between	60°C	• and	100°C	• degrade speed	4%
	100°C		150°C		10%
	150°C		200°C		16%
	200°C		250°C		23%
	250°C		300°C		30%
	300°C		350°C		37%
	350°C		400°C		45%
	400°C		450°C		54%
	450°C		500°C		64%

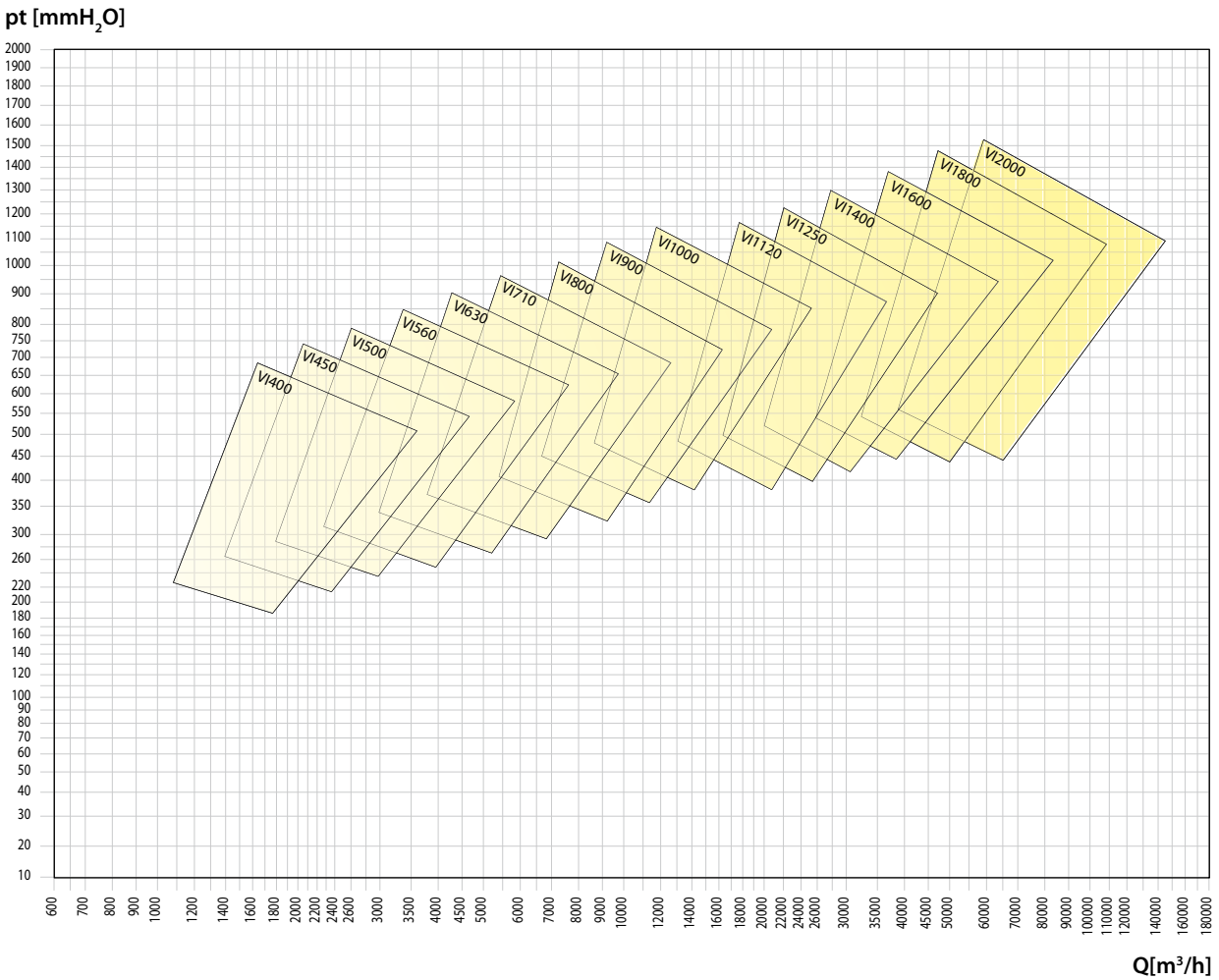

FA.T07.FM.2014.V2.0.UK