AAFA silencers - clean air L = 1500

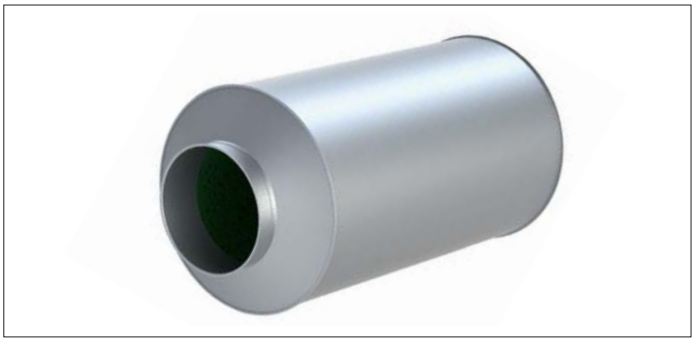

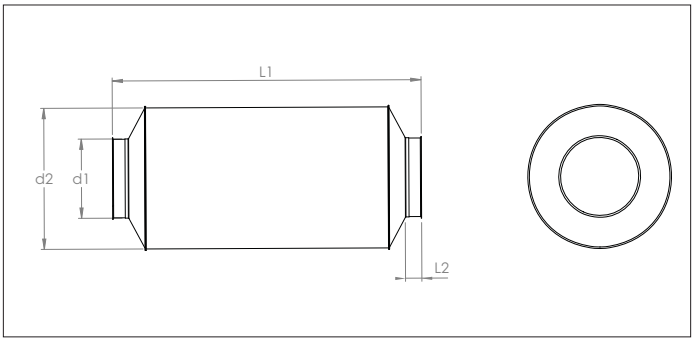

AAFA silencers - clean air L = 1500
AAFA silencers are designed to reduce the sound in ducting or in the workshop for use in overpressure, under-pressure and pressureless systems.

The silencers are made of galvanized sheet metal with sound absorbing material applied on the inside.

Material
Sendzimir galvanized
100 mm soundproofing material

Type
Rolled stitch-welded sheets with 6 mm edges for lock rings.

Options
- Other diameters
- Other lengths
- Other sheet thickness
- With perforated sheet metal plate for loaded air
- With Tedlar foil for moist medium
- Stainless steel (AISI 304)
- Painted version
- Other types of edges or connections, see 'edges and connections'

Loaded air version

Ø	Model	Ø d1	Ø d2	L1	L2	s	Weight
		mm	mm	mm	mm	mm	kg
150	AAFA000091	150	350	1500	50	0.88	17.70
160	AAFA000092	160	360	1500	50	0.88	19.20
180	AAFA000093	180	380	1500	50	0.88	22.50
200	AAFA000094	200	400	1500	50	0.88	24.00
225	AAFA000095	225	425	1500	50	0.88	25.80
250	AAFA000096	250	450	1500	50	0.88	27.30
275	AAFA000097	275	475	1500	50	0.88	29.10
300	AAFA000098	300	600	1500	50	0.88	30.60
315	AAFA000099	315	515	1500	50	0.88	23.90
350	AAFA000100	350	550	1500	50	0.88	39.90
400	AAFA000101	400	600	1500	50	0.88	43.20
450	AAFA000102	450	650	1500	50	0.88	48.00
500	AAFA000103	500	700	1500	50	0.88	53.10
550	AAFA000104	550	750	1500	50	0.88	57.15
600	AAFA000105	600	800	1500	50	0.88	61.95
630	AAFA000106	630	830	1500	50	0.88	63.00
650	AAFA000107	650	850	1500	50	0.88	66.00
700	AAFA000314	700	900	1500	50	0.88	79.50
750	AAFA000315	750	950	1500	50	0.88	90.24
800	AAFA000316	800	1000	1500	50	0.88	97.20
850	AAFA000317	850	1050	1500	50	0.88	104.24
900	AAFA000318	900	1100	1500	50	0.88	108.15
950	AAFA000319	950	1150	1500	50	0.88	117.21
1000	AAFA000320	1000	1200	1500	50	0.88	126.42